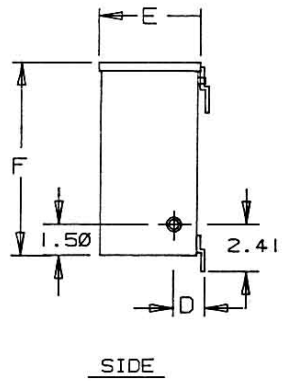


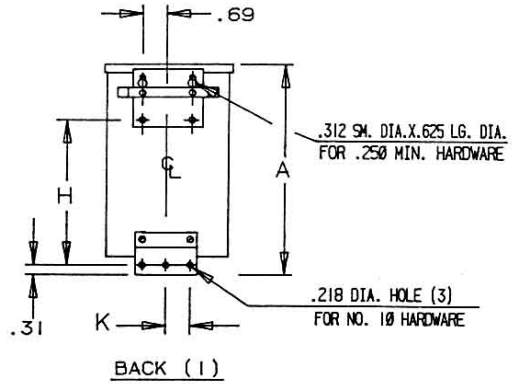


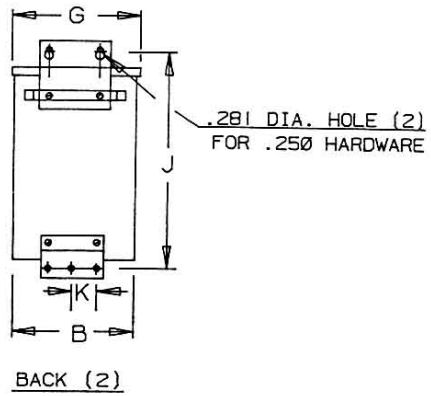


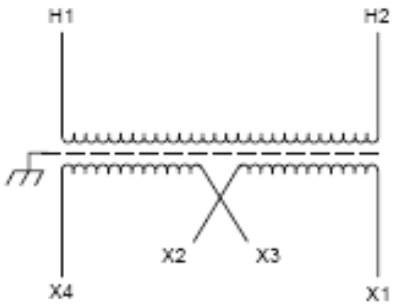


| Primary Volts | Connect Primary Lines To | Inter-Connect | Connect Secondary Lines To |
|---|---|---|---|
| 600 | H1-H2 | | |
| Secondary Volts | | | |
| 240 | | X2 to X3 | X1-X4 |
| 120/240 | | X2 to X3 | X1-X2-X4 |
| 120 | | X1 to X3<br>X2 to X4 | X1-X4 |

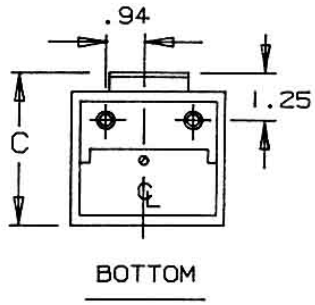


| KVA | CATALOG NUMBER | VOLTAGE | | Enclosure Rating | WEIGHT | PHASE | FREQ. |
|---|---|---|---|---|---|---|---|
| | | HIGH | LOW | | | | |
| 1.5 | **T-2-53111-S** | 600 | 120/240 | NEMA 3R | 30 Lbs | 1ϕ | 60 Hz |

TYPICAL PERFORMANCE DATA

| | |
|---|---|
| Winding Rise | 115°C |
| Insulation | 180°C |
| Sound Level | 40 dB |

| | | | |
|---|---|---|---|
| Windings: | CU | Impedance | |
| Encapsulated – Enclosed Design | | | |

| | |
|---|---|
| Typical Efficiency | |
| No Load Losses | |
| Full Load Losses | |

| A | B | C | D | E | F | G | H | J | K |
|---|---|---|---|---|---|---|---|---|---|
| 11.14 | 5.40 | 5.13 | 1.67 | 4.92 | 10.3 | 5.50 | 7.65 | 11.62 | 1.50 |

Revisions

ACME ELECTRIC

Type No.

| | | | | | | | |
|---|---|---|---|---|---|---|---|
| | | | | | A | PRINTS TO | CONTROL 7 |